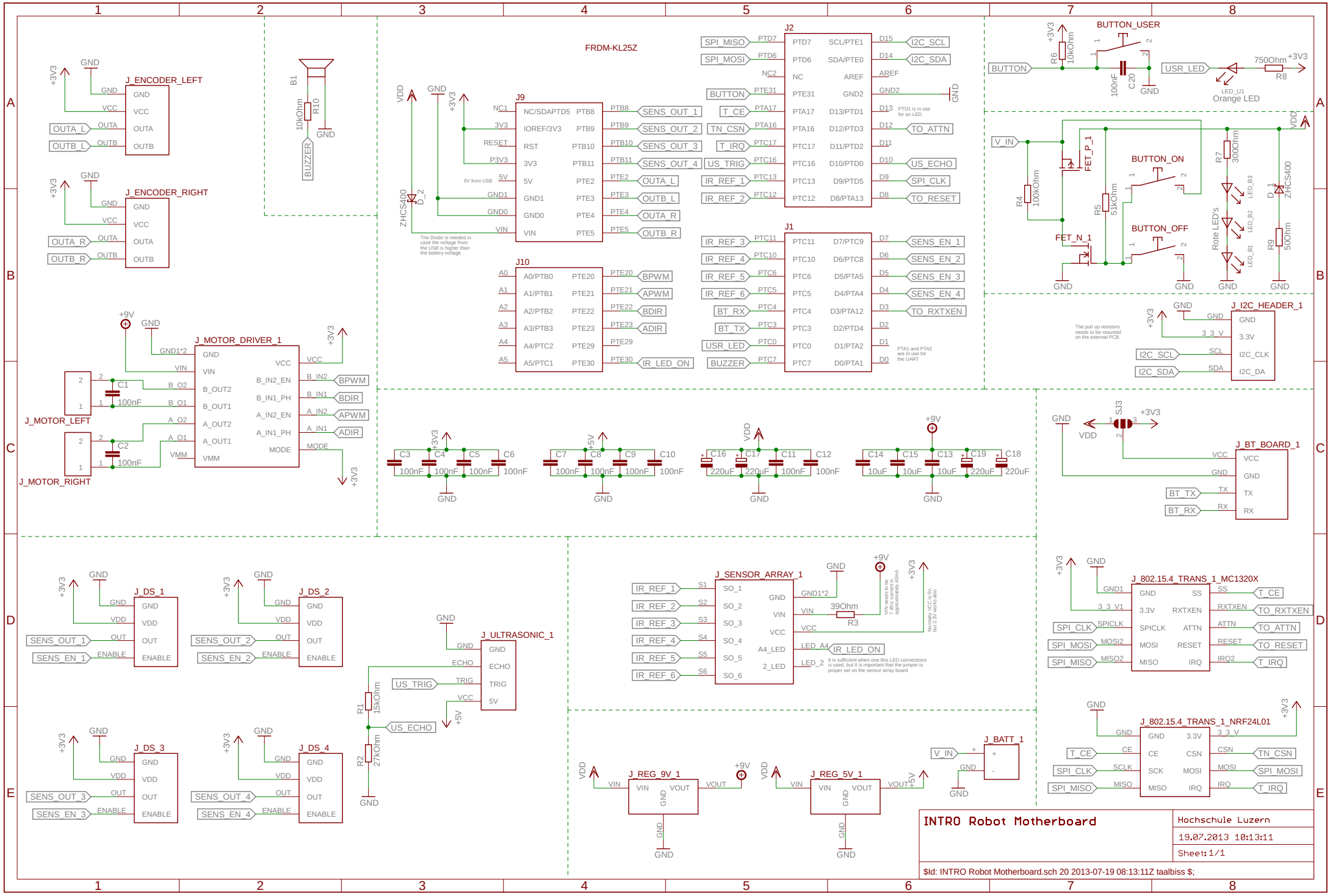
FRDM-KL25Z
J_ENCODER_LEFT
J_ENCODER_RIGHT
J_MOTOR_DRIVER_1
J_MOTOR_LEFT
J_MOTOR_RIGHT
J9
J10
J2
J1
BUTTON_USER
BUTTON_ON
BUTTON_OFF
FET_P_1
FET_N_1
J_I2C_HEADER_1
J_BT_BOARD_1
J_DS_1
J_DS_2
J_DS_3
J_DS_4
J_ULTRASONIC_1
J_SENSOR_ARRAY_1
J_802.15.4_TRANS_1_MC1320X
J_802.15.4_TRANS_1_NRF24L01
J_REG_9V_1
J_REG_5V_1
J_BATT_1
INTRO Robot Motherboard
Hochschule Luzern
19.07.2013 10:13:11
Sheet:1/1
$Id: INTRO Robot Motherboard.sch 20 2013-07-19 08:13:11Z taalbiss $;